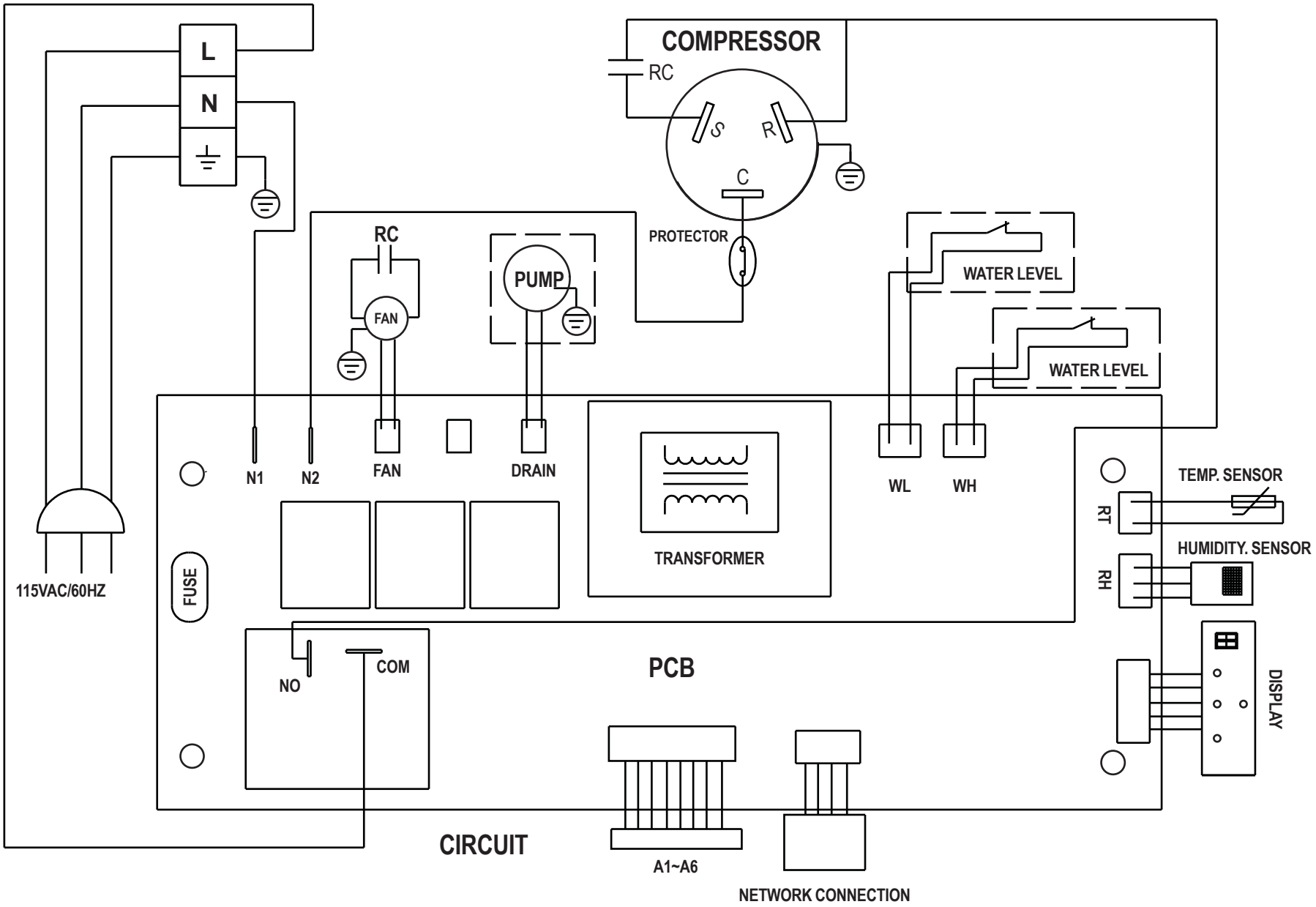
L
N
COMPRESSOR
RC
S
R
C
PROTECTOR
RC
FAN
PUMP
WATER LEVEL
WATER LEVEL
N1
N2
FAN
DRAIN
TRANSFORMER
WL
WH
TEMP. SENSOR
RT
HUMIDITY. SENSOR
RH
115VAC/60HZ
FUSE
NO
COM
PCB
DISPLAY
CIRCUIT
A1~A6
NETWORK CONNECTION